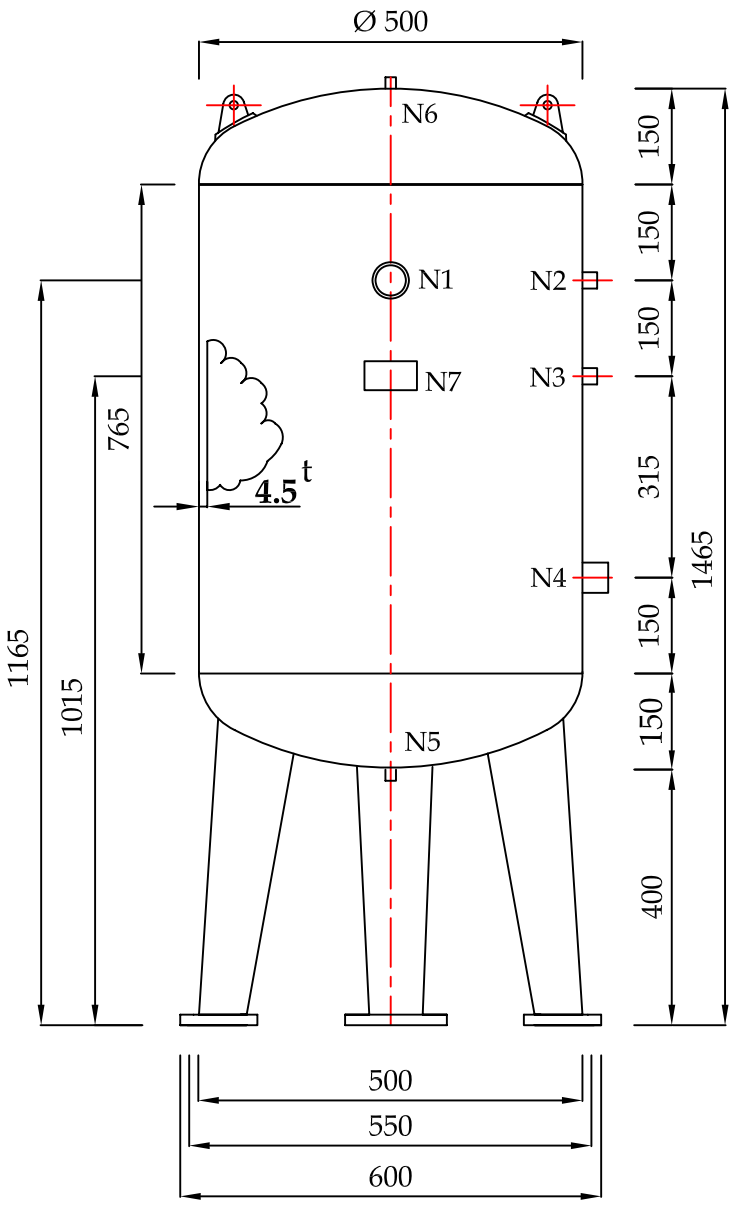

FRONT VIEW

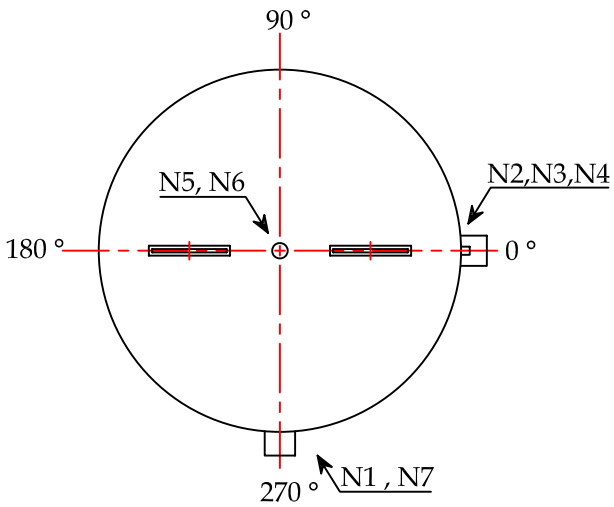

TOP VIEW

DESIGN DATA

CAPACITY AIR VOLUME		200 LITRES
NUMBER OF UNITS		1
PRESSURE DESIGN		10 BAR.g (150PSI.g)
HYDROSTATIC TEST		15 BAR.g (225PSI.g)
APPROX. WEIGHT		100 Kg
MATERIAL		SS 400 x 4.5 mm.thk.
PAINT	- INTERNAL SURFACE	COAL TAR EPOXY
	- EXTERNAL PRIMER	RED OXIDE
	- EXTERNAL SURFACE	TOA G-370

LONGITUDINAL & CIRCUMFERENTIAL WELDING

INSIDE	ELECTRICAL WELDING 4 mm.
	YAWATA L-55 (AWS.E-7016)
OUTSIDE	FULLY AUTOMATIC WELDING (SAW)
	FLUX LINCOLN # 860
	WIRE LINCOLN L-61 (AWS EM 22K)
NOZZLE AND OTHERS	SHIELD METAL ARC WELDING (SMAW)
	YAWATA L-55 (AWS.E-7016)

NOZZIE LIST

ITEM NO.	SERVICE	SIZE	Q'TY	CONNECTION
N1	AIR OUTLET	Ø 1 ½"	1	Socket BSW
N2	SAFETY VALVE	Ø ½ "	1	Socket BSW
N3	PRESSURE GAUGE	Ø ½ "	1	Socket BSW
N4	AIR INLET	Ø 1 ½"	1	Socket BSW
N5	DRAIN	Ø 1 "	1	Socket BSW
N6	HYDRO TEST NOZZLE	Ø ½ "	1	Socket BSW
N7	NAME PLATE		1	

AIR RECEIVER TANK CAPACITY 200/4.5 LTRS

CUSTOMER			
DRAW BY	S.Wirat	DATE	01/04/2011
APPROVED		REV	

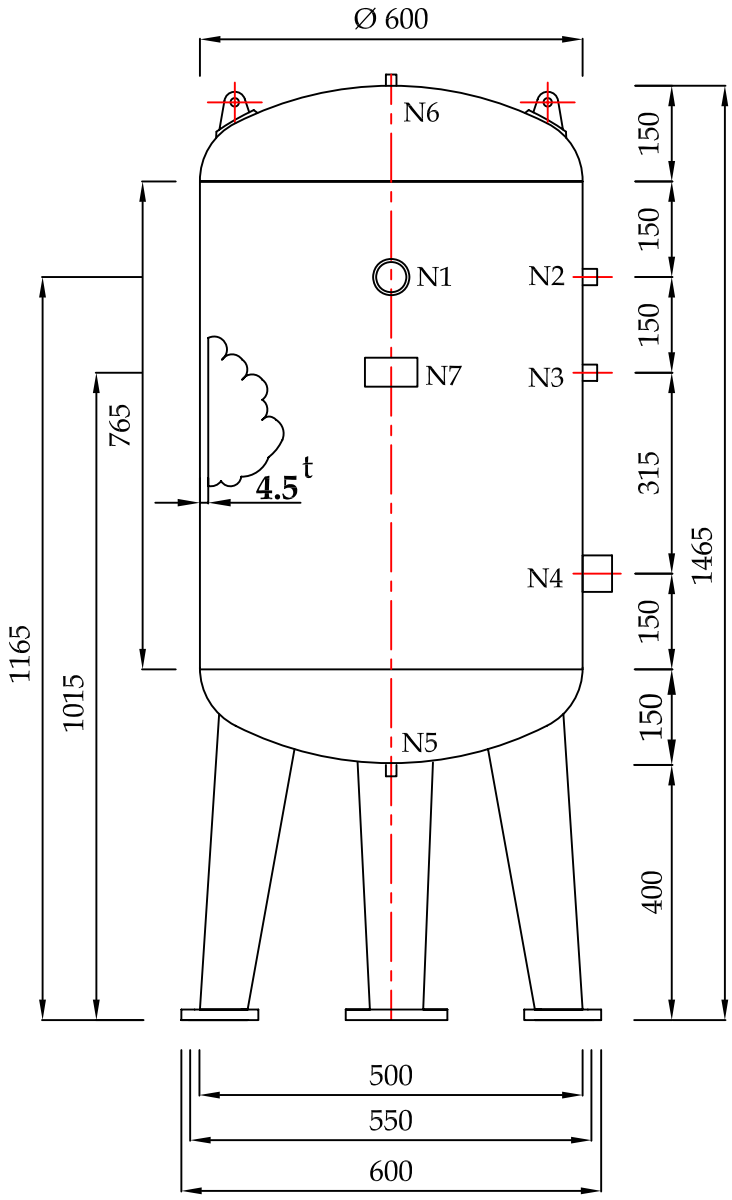

FRONT VIEW

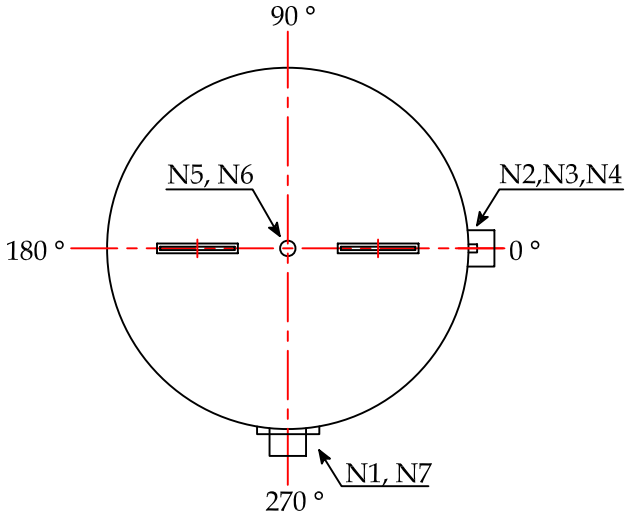

TOP VIEW

DESIGN DATA

CAPACITY AIR VOLUME		300 LITRES
NUMBER OF UNITS		1
PRESSURE DESIGN		10 BAR.g (150PSI.g)
HYDROSTATIC TEST		15 BAR.g (225PSI.g)
APPROX. WEIGHT		125 Kg.
MATERIAL		SS 400 x 4.5 mm.thk.
PAINT	- INTERNAL SURFACE	COAL TAR EPOXY
	- EXTERNAL PRIMER	RED OXIDE
	- EXTERNAL SURFACE	TOA G-370

LONGITUDINAL & CIRCUMFERENTIAL WELDING

INSIDE	ELECTRICAL WELDING 4 mm.
	YAWATA L - 55 (AWS.E-7016)
OUTSIDE	FULLY AUTOMATIC WELDING (SAW)
	FLUX LINCOLN # 860
	WIRE LINCOLN L-61 (AWS EM 22K)
NOZZLE AND OTHERS	SHIELD METAL ARC WELDING (SMAW)
	YAWATA L - 55 (AWS.E-7016)

NOZZIE LIST

ITEM NO.	SERVICE	SIZE	Q'TY	CONNECTION
N1	AIR OUTLET	Ø 1 ½"	1	Socket BSW
N2	SAFETY VALVE	Ø ½ "	1	Socket BSW
N3	PRESSURE GAUGE	Ø ½ "	1	Socket BSW
N4	AIR INLET	Ø 1 ½"	1	Socket BSW
N5	DRAIN	Ø 1 "	1	Socket BSW
N6	HYDRO TEST NOZZLE	Ø ½ "	1	Socket BSW
N7	NAME PLATE		1	Socket BSW

AIR RECEIVER TANK CAPACITY 300/4.5 LTRS

CUSTOMER			
DRAW BY	S.Wirat	DATE	17/03/2011
APPROVED		REV	0

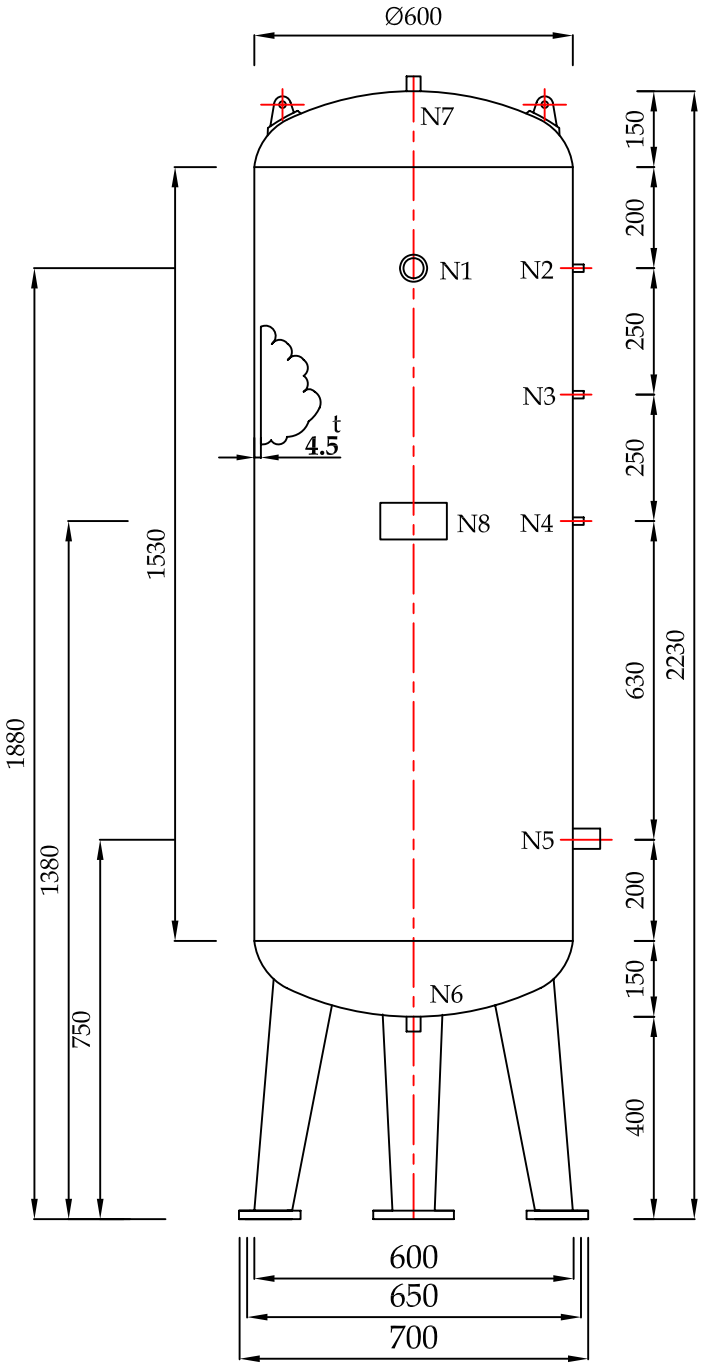

FRONT VIEW

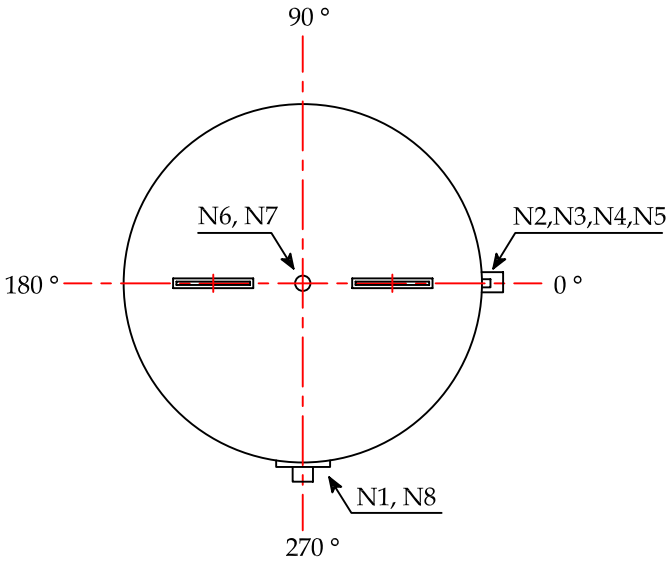

TOP VIEW

DESIGN DATA

CAPACITY AIR VOLUME		500 LITRES
NUMBER OF UNITS		1
PRESSURE DESIGN		10 BAR.g (150PSI.g)
HYDROSTATIC TEST		15 BAR.g (225PSI.g)
APPROX. WEIGHT		155 Kg
MATERIAL		SS 400 x 4.5 mm.thk.
PAINT	- INTERNAL SURFACE	COAL TAR EPOXY
	- EXTERNAL PRIMER	RED OXIDE
	- EXTERNAL SURFACE	TOA G-370

LONGITUDINAL & CIRCUMFERENTIAL WELDING

INSIDE	ELECTRICAL WELDING 4 mm.
	YAWATA L-55 (AWS.E-7016)
OUTSIDE	FULLY AUTOMATIC WELDING (SAW)
	FLUX LINCOLN # 860
	WIRE LINCOLN L-61 (AWS EM 22K)
NOZZLE AND OTHERS	SHIELD METAL ARC WELDING (SMAW)
	YAWATA L-55 (AWS.E-7016)

NOZZIE LIST

ITEM NO.	SERVICE	SIZE	Q'TY	CONNECTION
N1	AIR INLET	Ø 1 ½"	1	Socket BSW
N2	SAFETY VALVE	Ø 1 "	1	Socket BSW
N3	PRESSURE GAUGE	Ø ½ "	1	Socket BSW
N4	AIR REGULATION NOZZLE	Ø ½ "	1	Socket BSW
N5	AIR OUTLET	Ø 1 ½"	1	Socket BSW
N6	DRAIN	Ø 1 "	1	Socket BSW
N7	HYDRO TEST NOZZLE	Ø ½ "	1	Socket BSW
N8	NAME PLATE			

AIR RECEIVER TANK CAPACITY 500/4.5 LTRS

CUSTOMER			
DRAW BY	S.Wirat	DATE	16/05/2011
APPROVED		REV	0

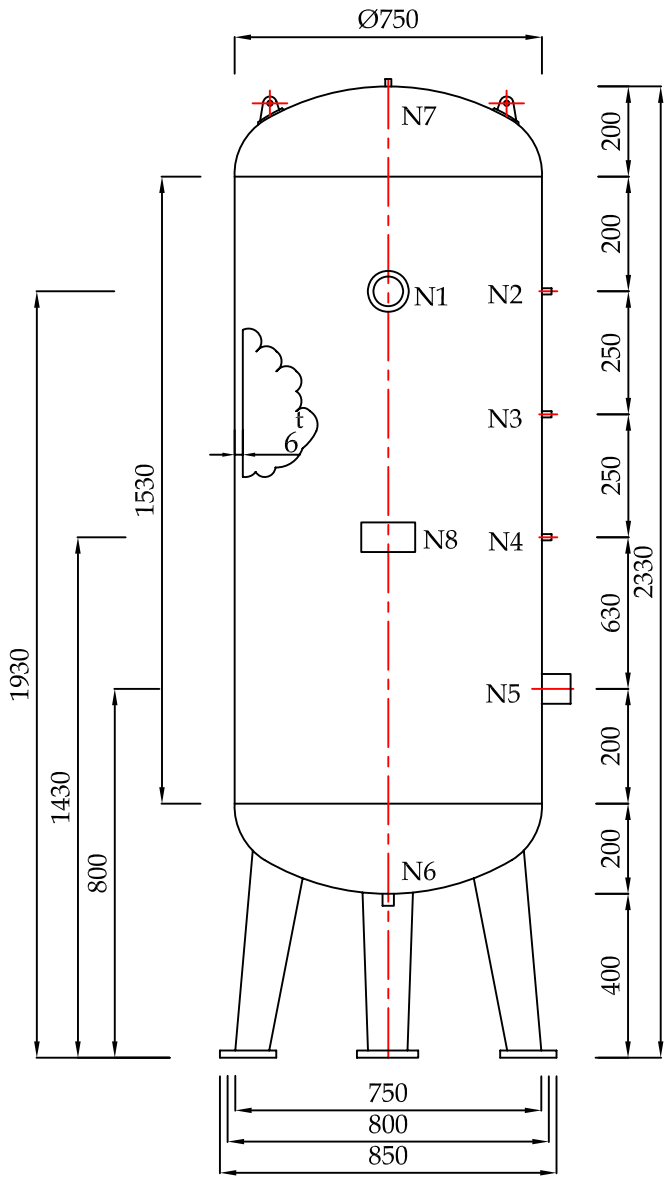

FRONT VIEW

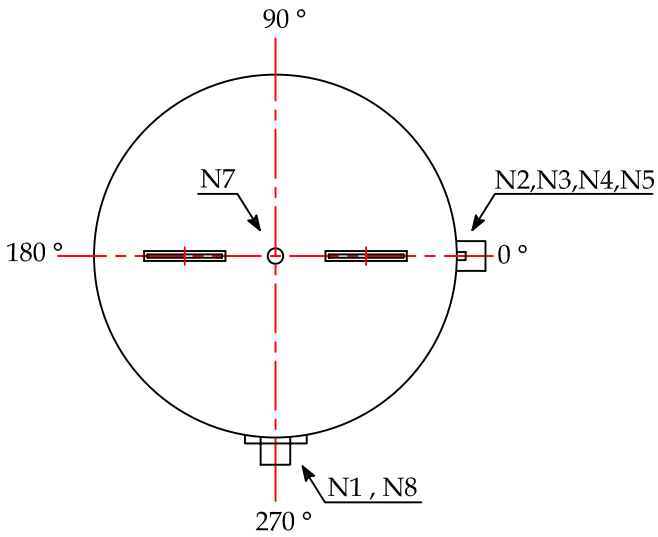

TOP VIEW

DESIGN DATA

CAPACITY AIR VOLUME		750 LITRES
NUMBER OF UNITS		1
PRESSURE DESIGN		10 BAR.g (150PSI.g)
HYDROSTATIC TEST		15 BAR.g (225PSI.g)
APPROX. WEIGHT		260 Kg
MATERIAL		SS 400 x 6 mm.thk.
PAINT	- INTERNAL SURFACE	COAL TAR EPOXY
	- EXTERNAL PRIMER	RED OXIDE
	- EXTERNAL SURFACE	TOA G-370

LONGITUDINAL & CIRCUMFERENTIAL WELDING

INSIDE	ELECTRICAL WELDING 4 mm.
	YAWATA L-55 (AWS.E-7016)
OUTSIDE	FULLY AUTOMATIC WELDING (SAW)
	FLUX LINCOLN # 860
	WIRE LINCOLN L-61 (AWS EM 22K)
NOZZLE AND OTHERS	SHIELD METAL ARC WELDING (SMAW)
	YAWATA L-55 (AWS.E-7016)

NOZZIE LIST

ITEM NO.	SERVICE	SIZE	Q'TY	CONNECTION
N1	AIR OUTLET	Ø 2 "	1	Socket BSW
N2	SAFETY VALVE	Ø 1 "	1	Socket BSW
N3	PRESSURE GAUGE	Ø ½ "	1	Socket BSW
N4	AIR REGULATION NOZZLE	Ø ½ "	1	Socket BSW
N5	AIR INLET	Ø 2 "	1	Socket BSW
N6	DRAIN	Ø 1 "	1	Socket BSW
N7	HYDRO TEST NOZZLE	Ø ½ "	1	Socket BSW
N8	NAME PLATE			

AIR RECEIVER TANK CAPACITY 750/6 LTRS

CUSTOMER			
DRAW BY	S.Wirat	DATE	01/04/2011
APPROVED		REV	0

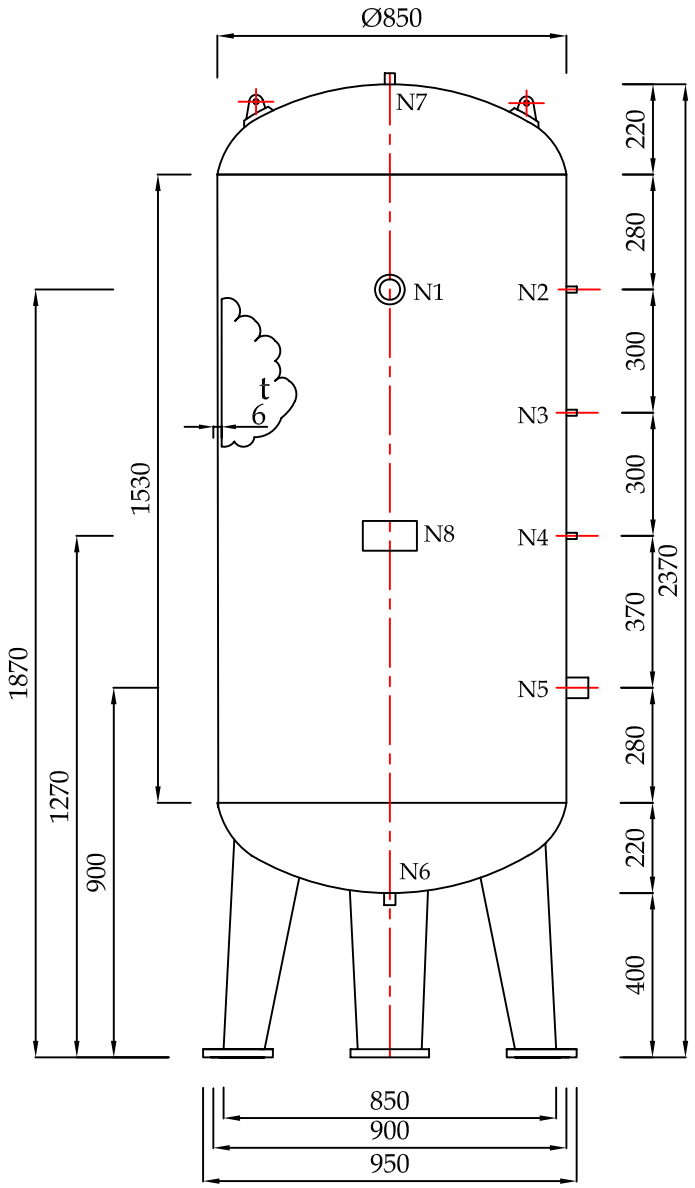

FRONT VIEW

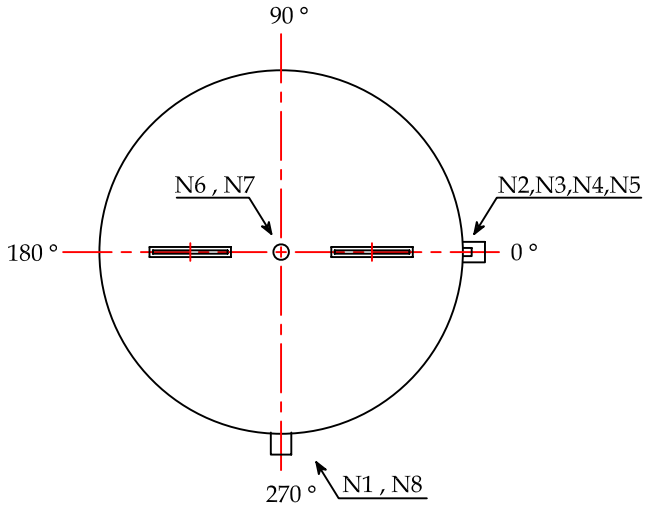

TOP VIEW

DESIGN DATA

CAPACITY AIR VOLUME		1000 LITRES
NUMBER OF UNITS		1
PRESSURE DESIGN		10 BAR.g (150PSI.g)
HYDROSTATIC TEST		15 BAR.g (225PSI.g)
APPROX. WEIGHT		310 Kg
MATERIAL		SS 400 x 6 mm.thk.
PAINT	- INTERNAL SURFACE	COAL TAR EPOXY
	- EXTERNAL PRIMER	RED OXIDE
	- EXTERNAL SURFACE	TOA G-370

LONGITUDINAL & CIRCUMFERENTIAL WELDING

INSIDE	ELECTRICAL WELDING 4 mm.
	YAWATA L - 55 (AWS.E-7016)
OUTSIDE	FULLY AUTOMATIC WELDING (SAW)
	FLUX LINCOLN # 860
	WIRE LINCOLN L-61 (AWS EM 22K)
NOZZLE AND OTHERS	SHIELD METAL ARC WELDING (SMAW)
	YAWATA L - 55 (AWS.E-7016)

NOZZIE LIST

ITEM NO.	SERVICE	SIZE	Q'TY	CONNECTION
N1	AIR OUTLET	Ø 2 "	1	Socket BSW
N2	SAFETY VALVE	Ø 1 "	1	Socket BSW
N3	PRESSURE GAUGE	Ø ½ "	1	Socket BSW
N4	AIR REGULATION NOZZLE	Ø ½ "	1	Socket BSW
N5	AIR INLET	Ø 2 "	1	Socket BSW
N6	DRAIN	Ø 1 "	1	Socket BSW
N7	HYDRO TEST NOZZLE	Ø 1 "	1	Socket BSW
N8	NAME PLATE			

AIR RECEIVER TANK CAPACITY 1000/6 LTRS

CUSTOMER			
DRAW BY	S.Wirat	DATE	17/03/2011
APPROVED		REV	0

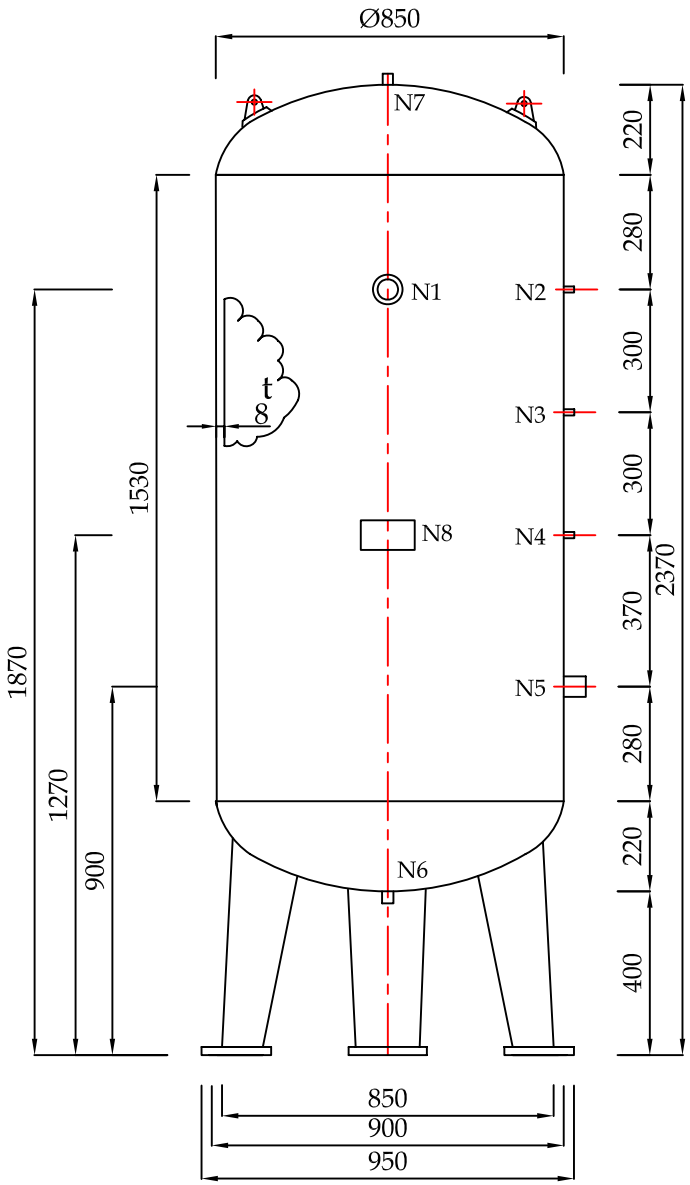

FRONT VIEW

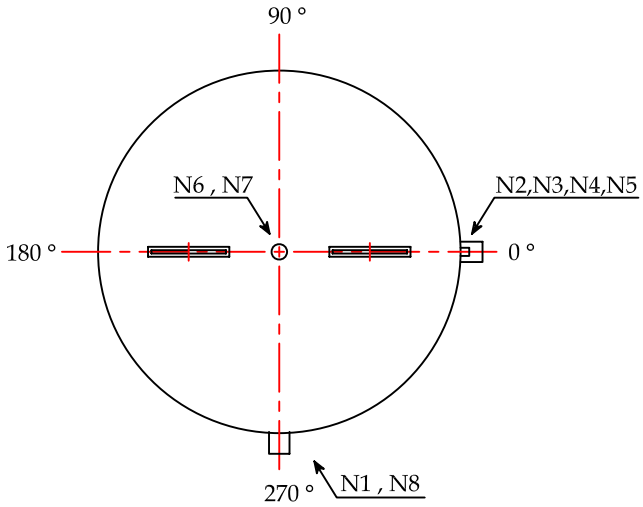

TOP VIEW

DESIGN DATA

CAPACITY AIR VOLUME		1000 LITRES
NUMBER OF UNITS		1
PRESSURE DESIGN		10 BAR.g (150PSI.g)
HYDROSTATIC TEST		15 BAR.g (225PSI.g)
APPROX. WEIGHT		400 Kg
MATERIAL		SS 400 x 8 mm.thk.
PAINT	- INTERNAL SURFACE	COAL TAR EPOXY
	- EXTERNAL PRIMER	RED OXIDE
	- EXTERNAL SURFACE	TOA G-370

LONGITUDINAL & CIRCUMFERENTIAL WELDING

INSIDE	ELECTRICAL WELDING 4 mm.
	YAWATA L - 55 (AWS.E-7016)
OUTSIDE	FULLY AUTOMATIC WELDING (SAW)
	FLUX LINCOLN # 860
	WIRE LINCOLN L-61 (AWS EM 22K)
NOZZLE AND OTHERS	SHIELD METAL ARC WELDING (SMAW)
	YAWATA L - 55 (AWS.E-7016)

NOZZIE LIST

ITEM NO.	SERVICE	SIZE	Q'TY	CONNECTION
N1	AIR OUTLET	Ø 2 "	1	Socket BSW
N2	SAFETY VALVE	Ø 1 "	1	Socket BSW
N3	PRESSURE GAUGE	Ø ½ "	1	Socket BSW
N4	AIR REGULATION NOZZLE	Ø ½ "	1	Socket BSW
N5	AIR INLET	Ø 2 "	1	Socket BSW
N6	DRAIN	Ø 1 "	1	Socket BSW
N7	HYDRO TEST NOZZLE	Ø 1 "	1	Socket BSW
N8	NAME PLATE			

AIR RECEIVER TANK CAPACITY 1000/8 LTRS

CUSTOMER			
DRAW BY	S.Wirat	DATE	17/03/2011
APPROVED		REV	0

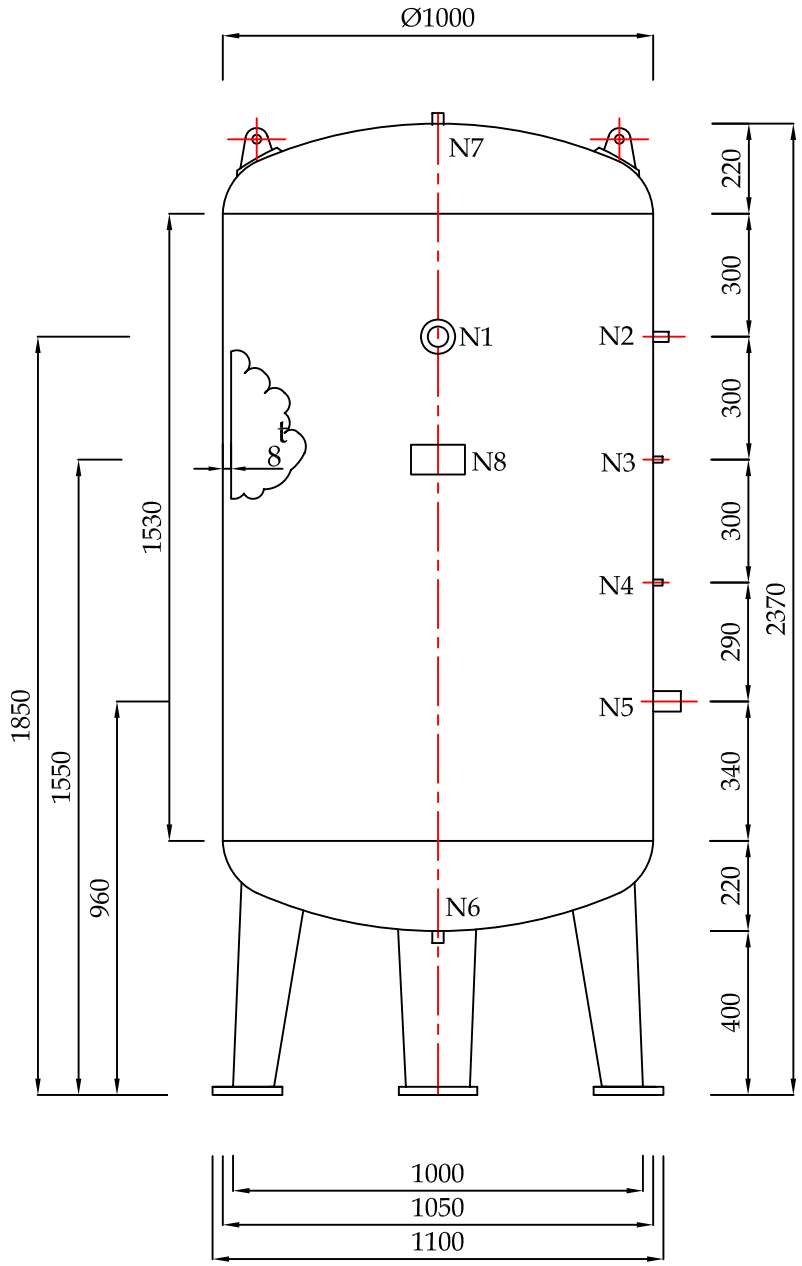

FRONT VIEW

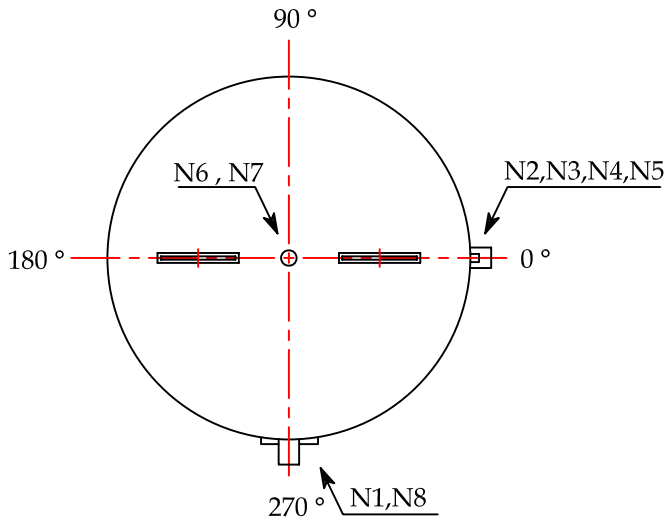

TOP VIEW

DESIGN DATA

CAPACITY AIR VOLUME		1500 LITRES
NUMBER OF UNITS		1
PRESSURE DESIGN		10 BAR.g (150PSI.g)
HYDROSTATIC TEST		15 BAR.g (225PSI.g)
APPROX. WEIGHT		450 Kg
MATERIAL		SS 400 x 8 mm.thk.
PAINT	- INTERNAL SURFACE	COAL TAR EPOXY
	- EXTERNAL PRIMER	RED OXIDE
	- EXTERNAL SURFACE	TOA G-370

LONGITUDINAL & CIRCUMFERENTIAL WELDING

INSIDE	ELECTRICAL WELDING 4 mm.
	YAWATA L - 55 (AWS.E-7016)
OUTSIDE	FULLY AUTOMATIC WELDING (SAW)
	FLUX LINCOLN # 860
	WIRE LINCOLN L-61 (AWS EM 22K)
NOZZLE AND OTHERS	SHIELD METAL ARC WELDING (SMAW)
	YAWATA L - 55 (AWS.E-7016)

NOZZIE LIST

ITEM NO.	SERVICE	SIZE	Q'TY	CONNECTION
N1	AIR OUTLET	Ø 2 "	1	Socket BSW
N2	SAFETY VALVE	Ø 1 "	1	Socket BSW
N3	PRESSURE GAUGE	Ø ½ "	1	Socket BSW
N4	AIR REGULATION NOZZLE	Ø ½ "	1	Socket BSW
N5	AIR INLET	Ø 2 "	1	Socket BSW
N6	DRAIN	Ø 1 "	1	Socket BSW
N7	HYDRO TEST NOZZLE	Ø 1 "	1	Socket BSW
N8	NAME PLATE			

AIR RECEIVER TANK CAPACITY 1500/8 LTRS

CUSTOMER			
DRAW BY	S.Wirat	DATE	04/04/2011
APPROVED		REV	0

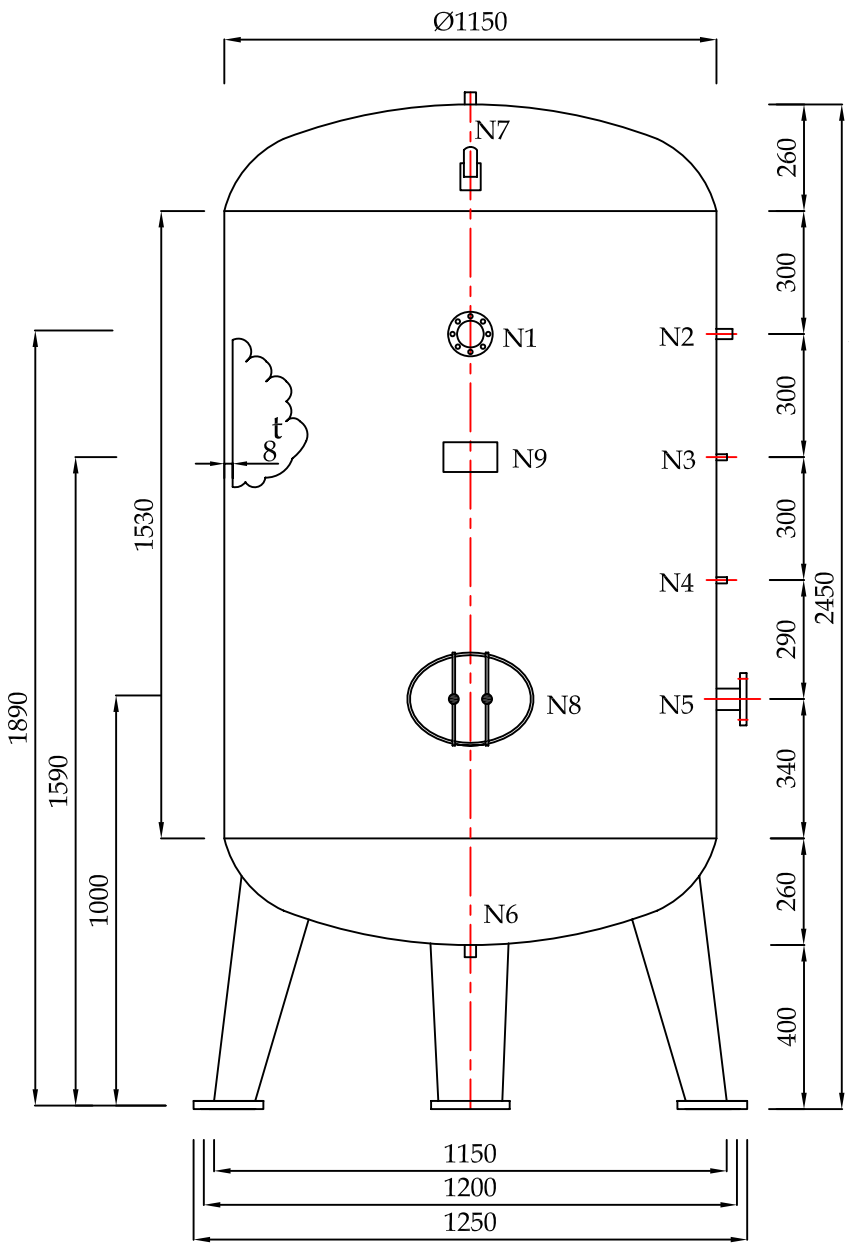

FRONT VIEW

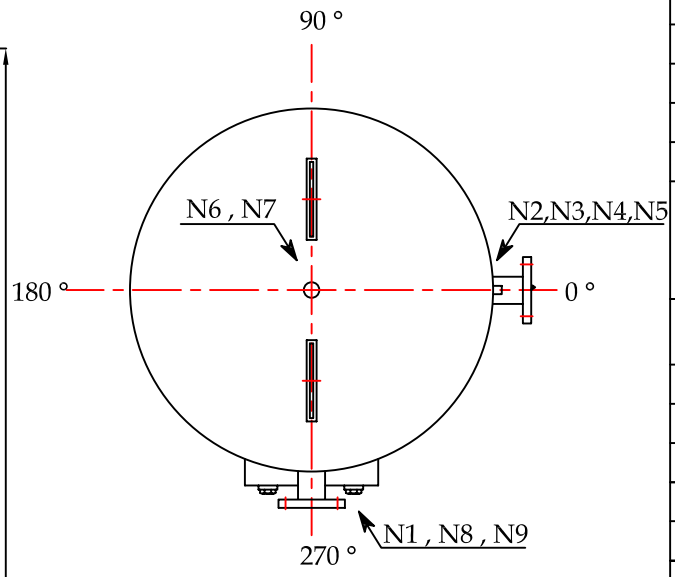

TOP VIEW

DESIGN DATA

CAPACITY AIR VOLUME		2000 LITRES
NUMBER OF UNITS		1
PRESSURE DESIGN		10 BAR.g (150PSI.g)
HYDROSTATIC TEST		15 BAR.g (225PSI.g)
APPROX. WEIGHT		550 Kg
MATERIAL		SS 400 x 8 mm.thk.
PAINT	- INTERNAL SURFACE	COAL TAR EPOXY
	- EXTERNAL PRIMER	RED OXIDE
	- EXTERNAL SURFACE	TOA G-370

LONGITUDINAL & CIRCUMFERENTIAL WELDING

INSIDE	ELECTRICAL WELDING 4 mm.
	YAWATA L - 55 (AWS.E-7016)
OUTSIDE	FULLY AUTOMATIC WELDING (SAW)
	FLUX LINCOLN # 860
	WIRE LINCOLN L-61 (AWS EM 22K)
NOZZLE AND OTHERS	SHIELD METAL ARC WELDING (SMAW)
	YAWATA L - 55 (AWS.E-7016)

NOZZIE LIST

ITEM NO.	SERVICE	SIZE	Q'TY	CONNECTION
N1	AIR OUTLET	Ø 2 "	1	FLANGE JIS 10 K
N2	SAFETY VALVE	Ø 1 "	1	Socket BSW
N3	PRESSURE GAUGE	Ø ½ "	1	Socket BSW
N4	AIR REGULATION NOZZLE	Ø ½ "	1	Socket BSW
N5	AIR INLET	Ø 2 "	1	FLANGE JIS 10 K
N6	DRAIN	Ø 1 "	1	Socket BSW
N7	HYDRO TEST NOZZLE	Ø 1 "	1	Socket BSW
N8	MAN HOLE	12"x14"	1	
N9	NAME PLATE			

AIR RECEIVER TANK CAPACITY 2000/8 LTRS

CUSTOMER			
DRAW BY	S.Wirat	DATE	04/04/2011
APPROVED		REV	0

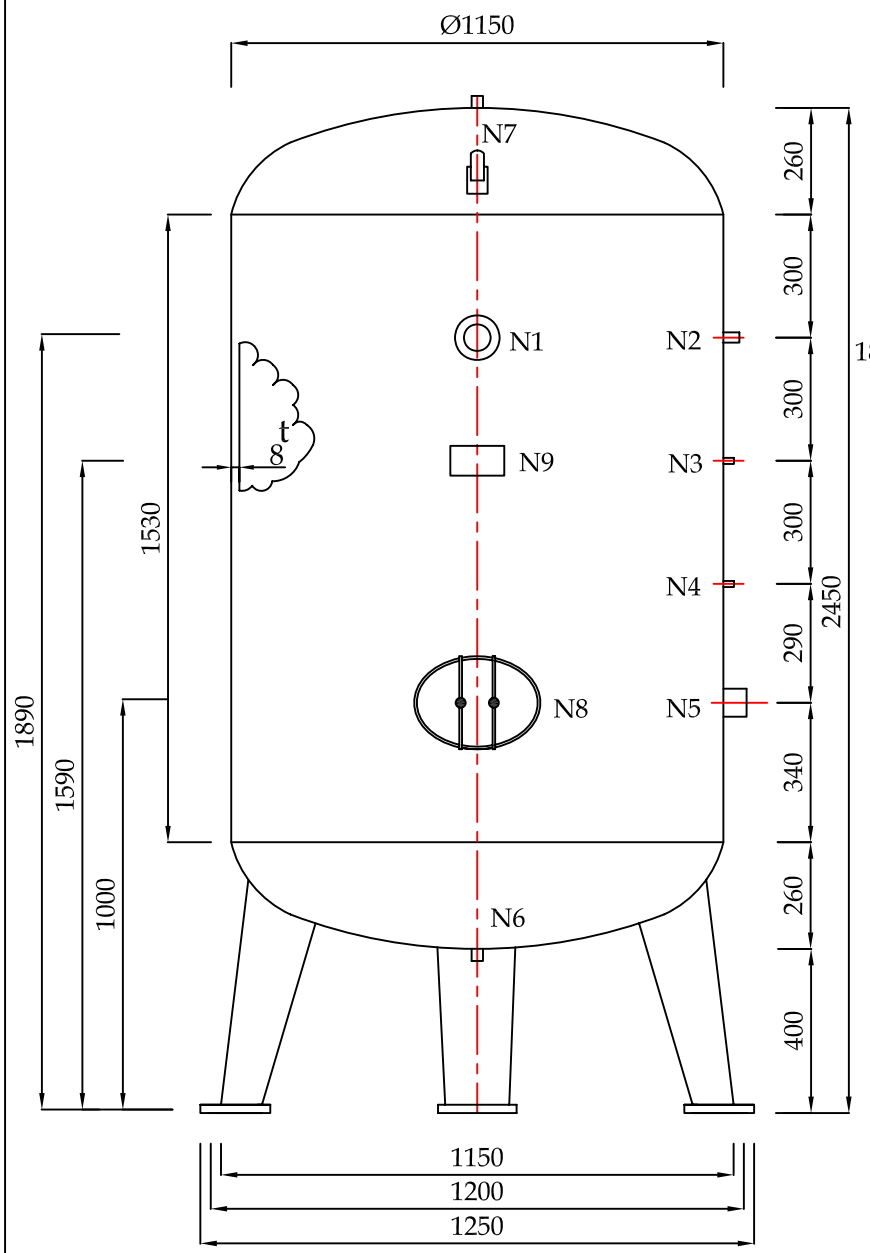

FRONT VIEW

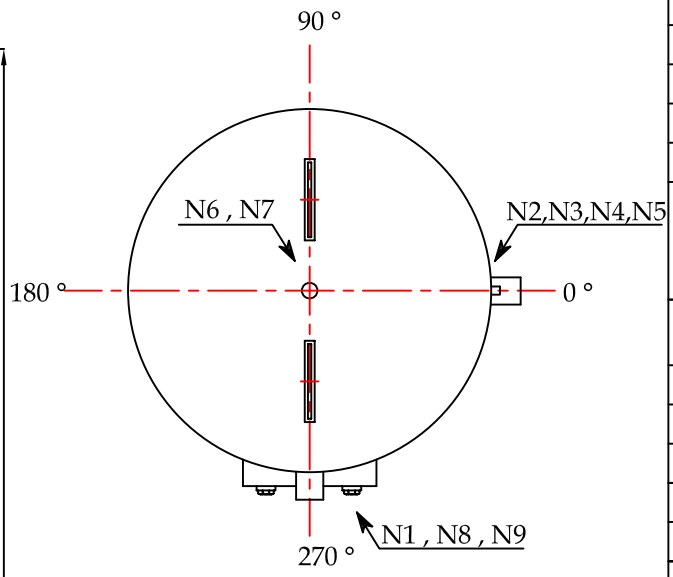

TOP VIEW

Socket

DESIGN DATA

CAPACITY AIR VOLUME		2000 LITRES
NUMBER OF UNITS		1
PRESSURE DESIGN		10 BAR.g (150PSI.g)
HYDROSTATIC TEST		15 BAR.g (225PSI.g)
APPROX. WEIGHT		550 Kg
MATERIAL		SS 400 x 8 mm.thk.
PAINT	- INTERNAL SURFACE	COAL TAR EPOXY
	- EXTERNAL PRIMER	RED OXIDE
	- EXTERNAL SURFACE	TOA G-370

LONGITUDINAL & CIRCUMFERENTIAL WELDING

INSIDE	ELECTRICAL WELDING 4 mm.
	YAWATA L - 55 (AWS.E-7016)
OUTSIDE	FULLY AUTOMATIC WELDING (SAW)
	FLUX LINCOLN # 860
	WIRE LINCOLN L-61 (AWS EM 22K)
NOZZLE AND OTHERS	SHIELD METAL ARC WELDING (SMAW)
	YAWATA L - 55 (AWS.E-7016)

NOZZIE LIST

ITEM NO.	SERVICE	SIZE	Q'TY	CONNECTION
N1	AIR OUTLET	Ø 2 "	1	Socket BSW
N2	SAFETY VALVE	Ø 1 "	1	Socket BSW
N3	PRESSURE GAUGE	Ø ½ "	1	Socket BSW
N4	AIR REGULATION NOZZLE	Ø ½ "	1	Socket BSW
N5	AIR INLET	Ø 2 "	1	Socket BSW
N6	DRAIN	Ø 1 "	1	Socket BSW
N7	HYDRO TEST NOZZLE	Ø 1 "	1	Socket BSW
N8	MAN HOLE	12"x14"	1	
N9	NAME PLATE			

AIR RECEIVER TANK CAPACITY 2000/8 LTRS

CUSTOMER			
DRAW BY	S.Wirat	DATE	04/04/2011
APPROVED		REV	0

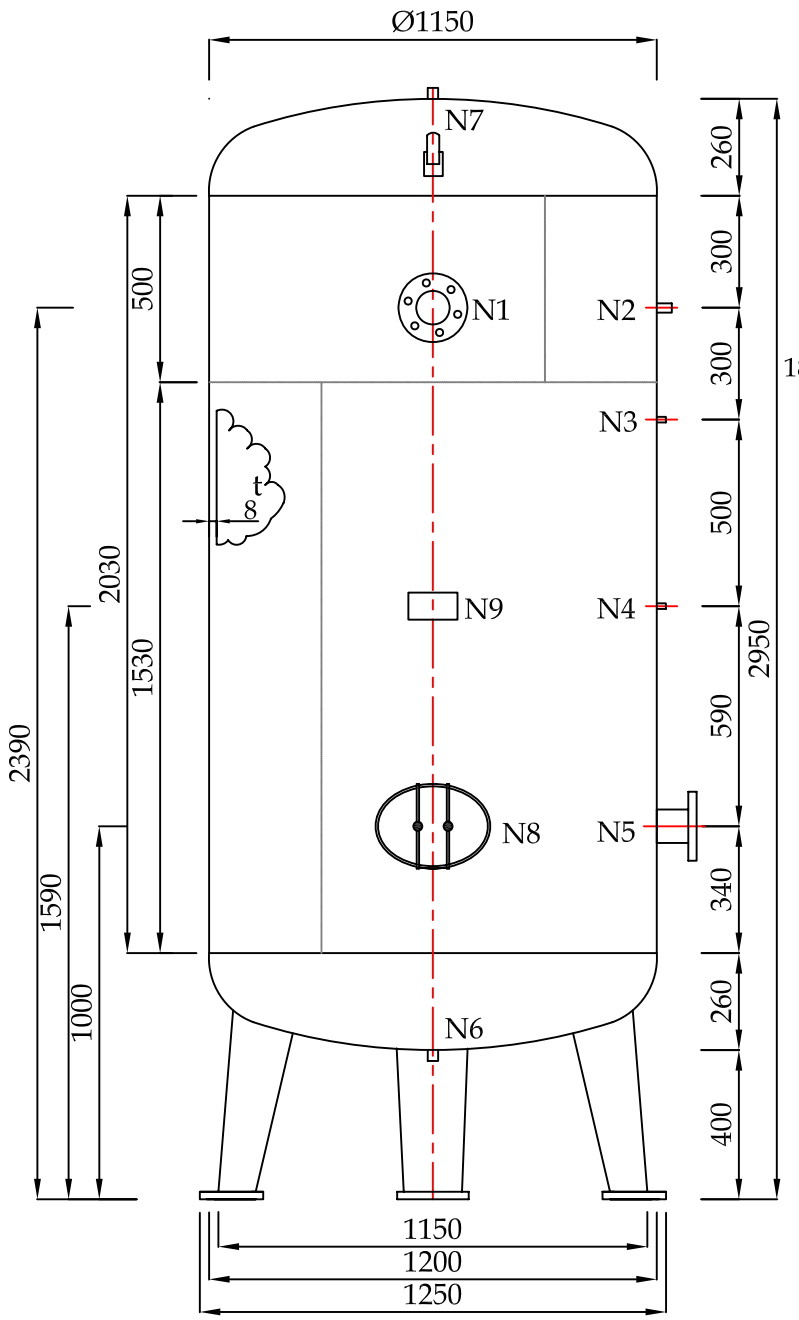

FRONT VIEW

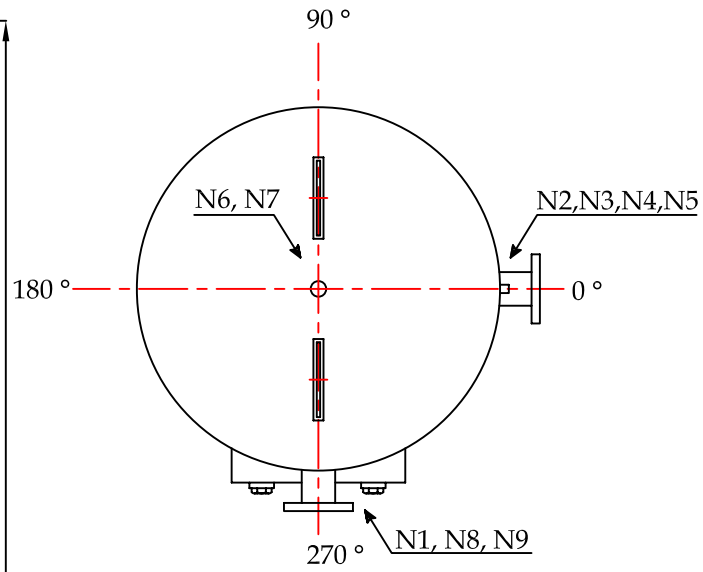

TOP VIEW

DESIGN DATA

CAPACITY AIR VOLUME		2500 LITRES
NUMBER OF UNITS		1
PRESSURE DESIGN		10 BAR.g (150PSI.g)
HYDROSTATIC TEST		15 BAR.g (225PSI.g)
APPROX. WEIGHT		670 Kg
MATERIAL		SS 400 x 8 mm.thk.
PAINT	- INTERNAL SURFACE	COAL TAR EPOXY
	- EXTERNAL PRIMER	RED OXIDE
	- EXTERNAL SURFACE	TOA G-370

LONGITUDINAL & CIRCUMFERENTIAL WELDING

INSIDE	ELECTRICAL WELDING 4 mm.
	YAWATA L-55 (AWS.E-7016)
OUTSIDE	FULLY AUTOMATIC WELDING (SAW)
	FLUX LINCOLN # 860
	WIRE LINCOLN L-61 (AWS EM 22K)
NOZZLE AND OTHERS	SHIELD METAL ARC WELDING (SMAW)
	YAWATA L-55 (AWS.E-7016)

NOZZIE LIST

ITEM NO.	SERVICE	SIZE	Q'TY	CONNECTION
N1	AIR OUTLET	Ø 2 ½ "	1	FLANGE JIS 10 K
N2	SAFETY VALVE	Ø 1 "	1	Socket BSW
N3	PRESSURE GAUGE	Ø ½ "	1	Socket BSW
N4	AIR REGULATION NOZZLE	Ø ½ "	1	Socket BSW
N5	AIR INLET	Ø 2 ½ "	1	FLANGE JIS 10 K
N6	DRAIN	Ø 1 "	1	Socket BSW
N7	HYDRO TEST NOZZLE	Ø 1 "	1	Socket BSW
N8	MAN HOLE	12"x14"	1	
N9	NAME PLATE			

AIR RECEIVER TANK CAPACITY 2500/8 LTRS

CUSTOMER			
DRAW BY	S.Wirat	DATE	04/04/2011
APPROVED		REV	0

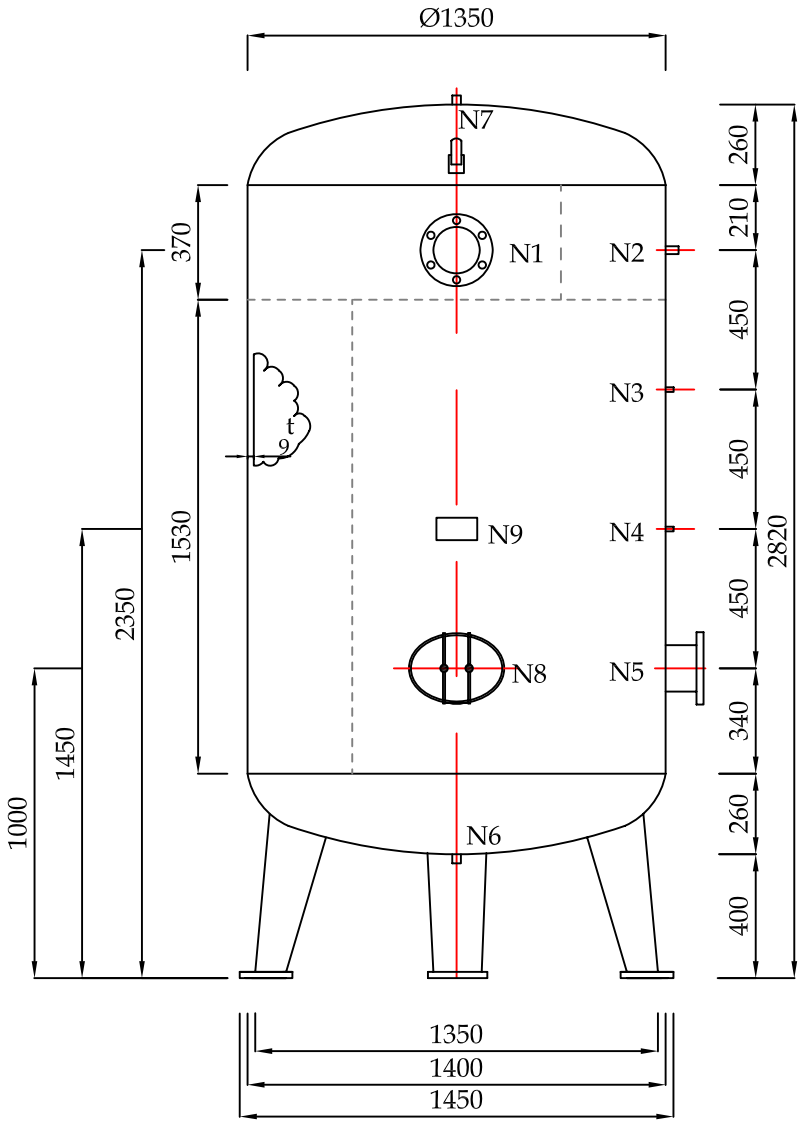

FRONT VIEW

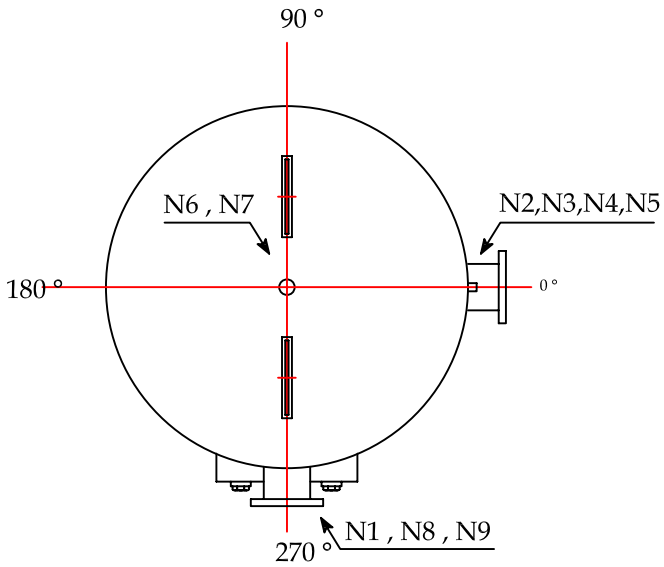

TOP VIEW

DESIGN DATA

CAPACITY AIR VOLUME		3000 LITRES
NUMBER OF UNITS		1
PRESSURE DESIGN		10 BAR.g (150PSI.g)
HYDROSTATIC TEST		15 BAR.g (225PSI.g)
APPROX. WEIGHT		800 Kg
MATERIAL		SS 400 x 9 mm.thk.
PAINT	- INTERNAL SURFACE	COAL TAR EPOXY
	- EXTERNAL PRIMER	RED OXIDE
	- EXTERNAL SURFACE	TOA G-370

LONGITUDINAL & CIRCUMFERENTIAL WELDING

INSIDE	ELECTRICAL WELDING 4 mm.
	YAWATA L - 55 (AWS.E-7016)
OUTSIDE	FULLY AUTOMATIC WELDING (SAW)
	FLUX LINCOLN # 860
	WIRE LINCOLN L-61 (AWS EM 22K)
NOZZLE AND OTHERS	SHIELD METAL ARC WELDING (SMAW)
	YAWATA L - 55 (AWS.E-7016)

NOZZIE LIST

ITEM NO.	SERVICE	SIZE	QTY	CONNECTION
N1	AIR OUTLET	Ø 3 "	1	Flang Jis 10 K
N2	SAFETY VALVE	Ø 1 "	1	Socket BSW
N3	PRESSURE GAUGE	Ø ½ "	1	Socket BSW
N4	AIR REGULATION NOZZLE	Ø ½ "	1	Socket BSW
N5	AIR INLET	Ø 3 "	1	Flang Jis 10 K
N6	DRAIN	Ø 1 "	1	Socket BSW
N7	HYDRO TEST NOZZLE	Ø 1 "	1	Socket BSW
N8	MAN HOLE	12"x14"	1	
N9	NAME PLATE			

AIR RECEIVER TANK CAPACITY 3000/9 LTRS

CUSTOMER			
DRAW BY	S.Wirat	DATE	10/04/2011
APPROVED		REV	0

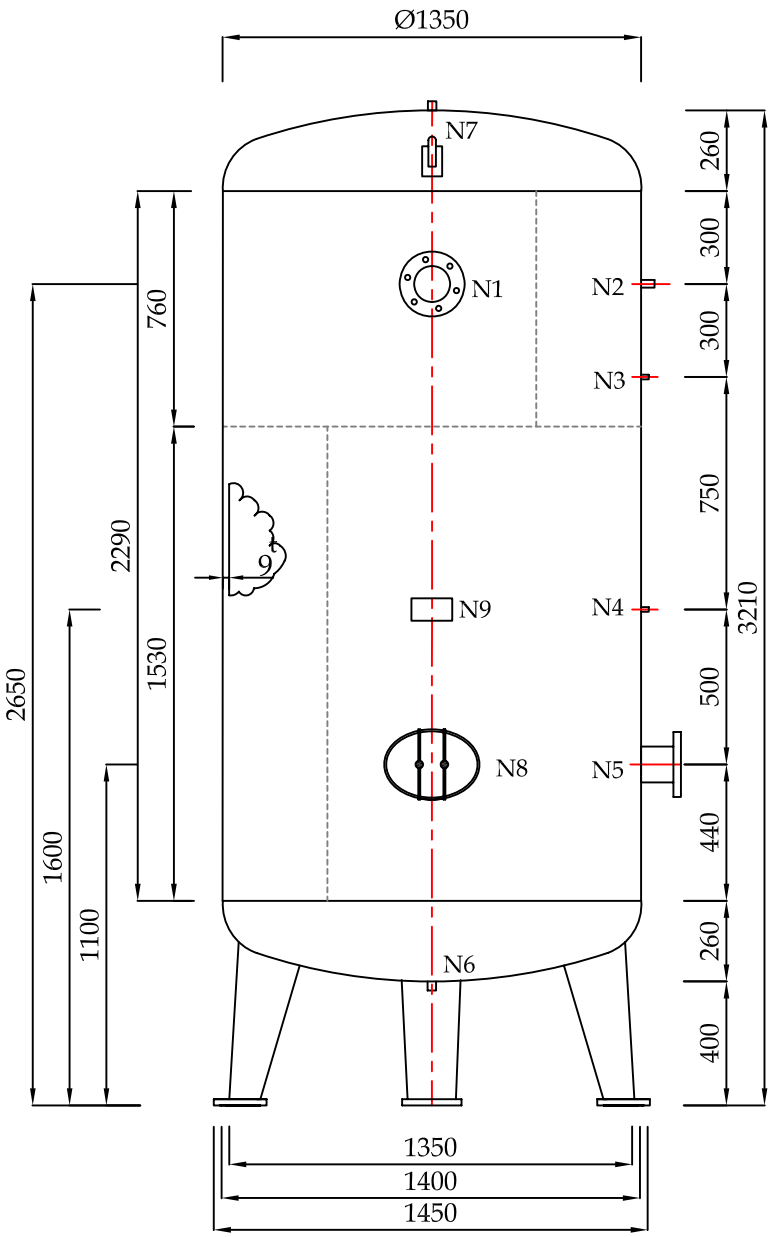

FRONT VIEW

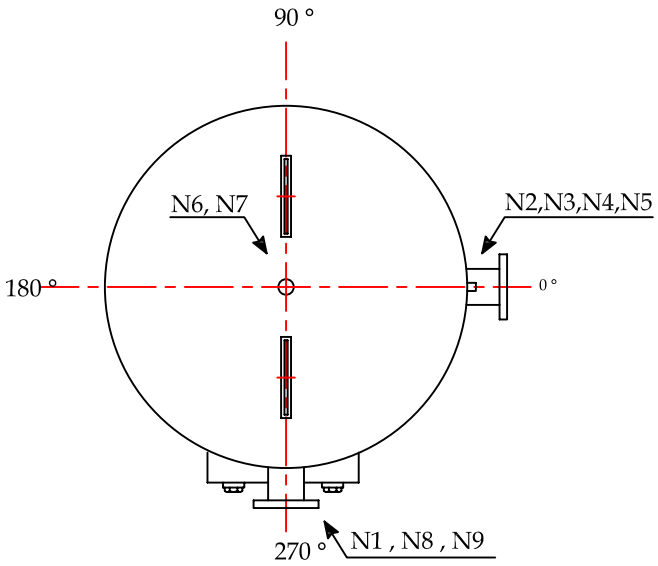

TOP VIEW

DESIGN DATA

CAPACITY AIR VOLUME		4000 LITRES
NUMBER OF UNITS		1
PRESSURE DESIGN		10 BAR.g (150PSI.g)
HYDROSTATIC TEST		15 BAR.g (225PSI.g)
APPROX. WEIGHT		1020 Kg
MATERIAL		SS 400 x 9 mm.thk.
PAINT	- INTERNAL SURFACE	COAL TAR EPOXY
	- EXTERNAL PRIMER	RED OXIDE
	- EXTERNAL SURFACE	TOA G-370

LONGITUDINAL & CIRCUMFERENTIAL WELDING

INSIDE	ELECTRICAL WELDING 4 mm.
	YAWATA L - 55 (AWS.E-7016)
OUTSIDE	FULLY AUTOMATIC WELDING (SAW)
	FLUX LINCOLN # 860
	WIRE LINCOLN L-61 (AWS EM 22K)
NOZZLE AND OTHERS	SHIELD METAL ARC WELDING (SMAW)
	YAWATA L - 55 (AWS.E-7016)

NOZZIE LIST

ITEM NO.	SERVICE	SIZE	Q'TY	CONNECTION
N1	AIR OUTLET	Ø 4 "	1	FLANGE JIS 10 K
N2	SAFETY VALVE	Ø 1 "	1	Socket BSW
N3	PRESSURE GAUGE	Ø ½ "	1	Socket BSW
N4	AIR REGULATION NOZZLE	Ø ½ "	1	Socket BSW
N5	AIR INLET	Ø 4 "	1	FLANGE JIS 10 K
N6	DRAIN	Ø 1 "	1	Socket BSW
N7	HYDRO TEST NOZZLE	Ø 1 "	1	Socket BSW
N8	MAN HOLE	12"x14"	1	
N9	NAME PLATE			

AIR RECEIVER TANK CAPACITY 4000/9 LTRS

CUSTOMER			
DRAW BY	S.Wirat	DATE	20/12/2010
APPROVED		REV	0

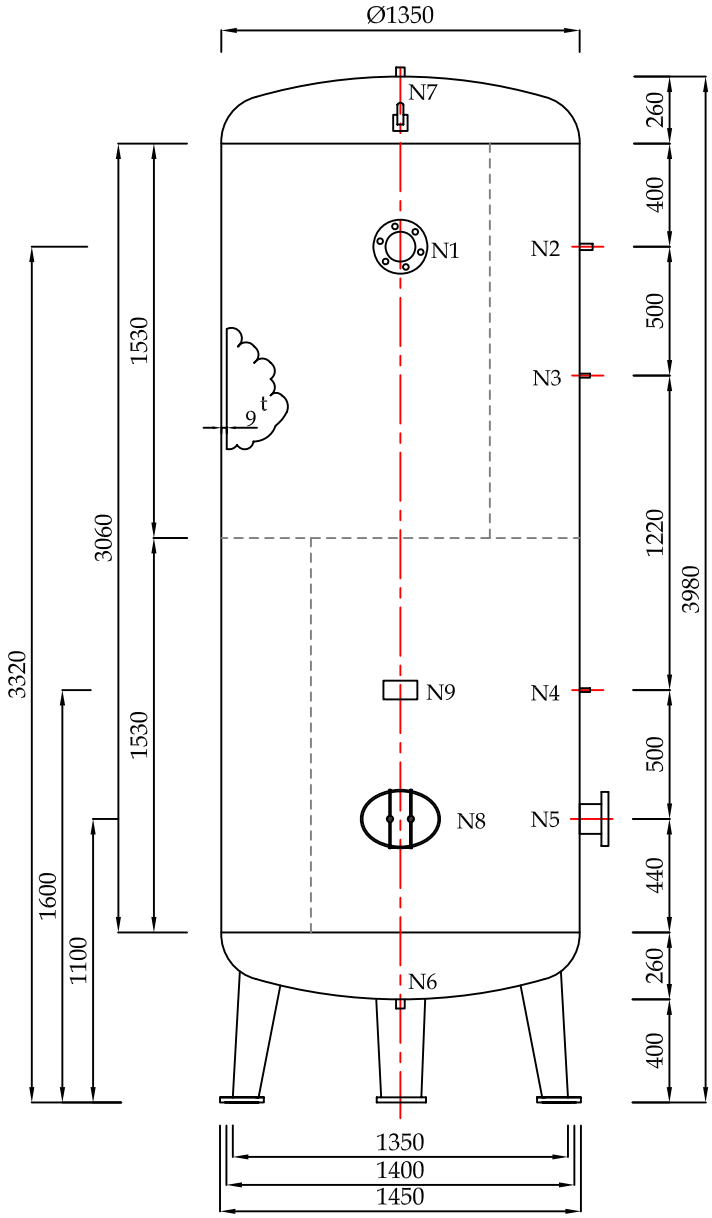

FRONT VIEW

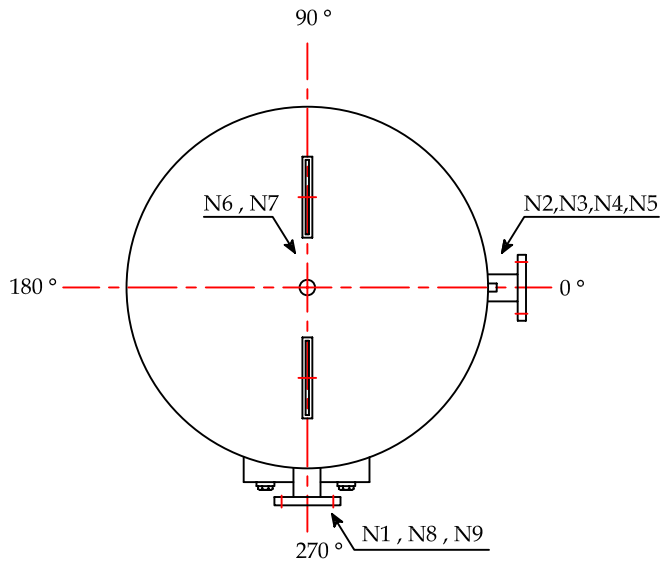

TOP VIEW

DESIGN DATA

CAPACITY AIR VOLUME		5000 LITRES
NUMBER OF UNITS		1
PRESSURE DESIGN		10 BAR.g (150PSI.g)
HYDROSTATIC TEST		15 BAR.g (225PSI.g)
APPROX. WEIGHT		1200 Kg
MATERIAL		SS400 x 9 mm.thk.
PAINT	- INTERNAL SURFACE	COAL TAR EPOXY
	- EXTERNAL PRIMER	RED OXIDE
	- EXTERNAL SURFACE	TOA G-370

LONGITUDINAL & CIRCUMFERENTIAL WELDING

INSIDE	ELECTRICAL WELDING 4 mm.
	YAWATA L - 55 (AWS.E-7016)
OUTSIDE	FULLY AUTOMATIC WELDING (SAW)
	FLUX LINCOLN # 860
	WIRE LINCOLN L-61 (AWS EM 22K)
NOZZLE AND OTHERS	SHIELD METAL ARC WELDING (SMAW)
	YAWATA L - 55 (AWS.E-7016)

NOZZIE LIST

ITEM NO.	SERVICE	SIZE	Q'TY	CONNECTION
N1	AIR OUTLET	Ø 4 "	1	FLANGE JIS 10 K
N2	SAFETY VALVE	Ø 1 "	1	Socket BSW
N3	PRESSURE GAUGE	Ø ½ "	1	Socket BSW
N4	AIR REGULATION NOZZLE	Ø ½ "	1	Socket BSW
N5	AIR INLET	Ø 4 "	1	FLANGE JIS 10 K
N6	DRAIN	Ø 1 "	1	Socket BSW
N7	HYDRO TEST NOZZLE	Ø 1 "	1	Socket BSW
N8	MAN HOLE	12"x14"	1	
N9	NAME PLATE			

AIR RECEIVER TANK CAPACITY 5000/9 LTRS

CUSTOMER			
DRAW BY	S.Wirat	DATE	05/05/2011
APPROVED		REV	0

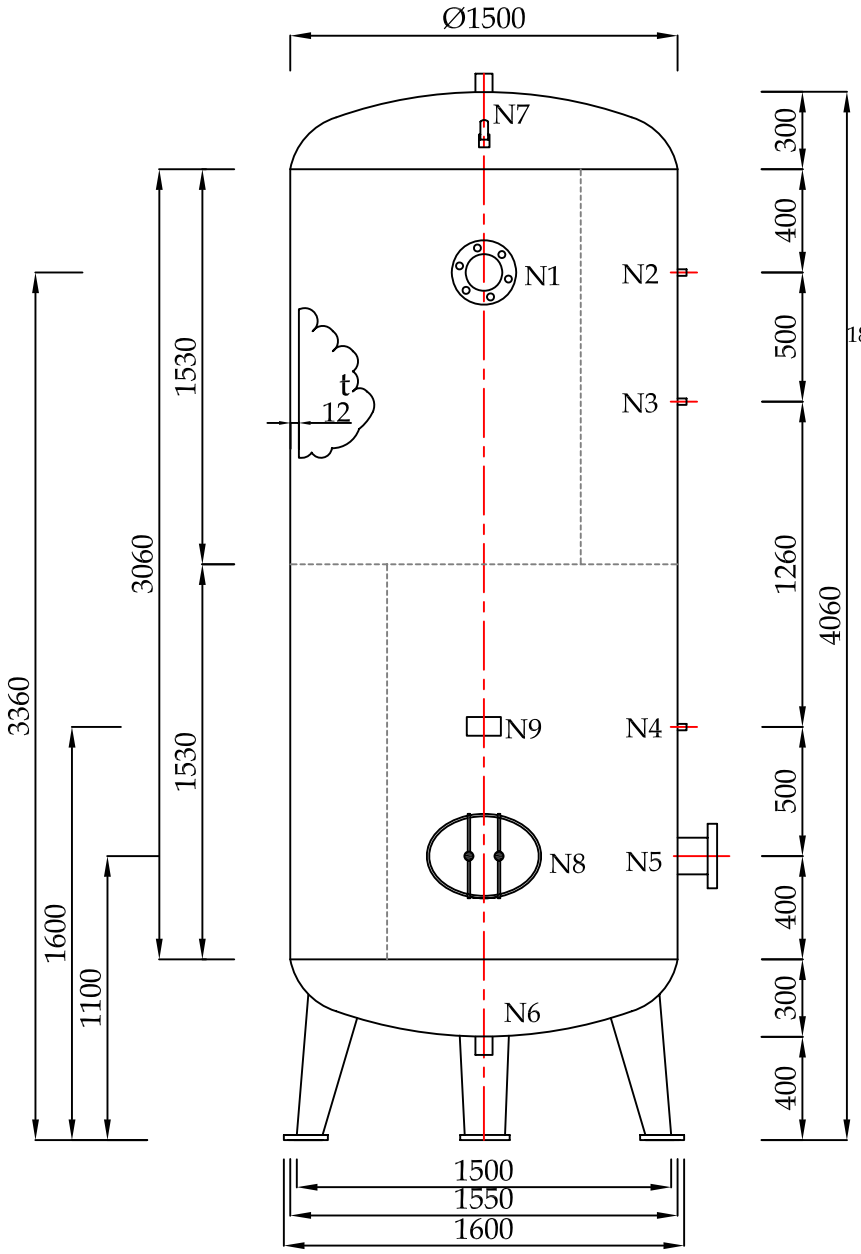

FRONT VIEW

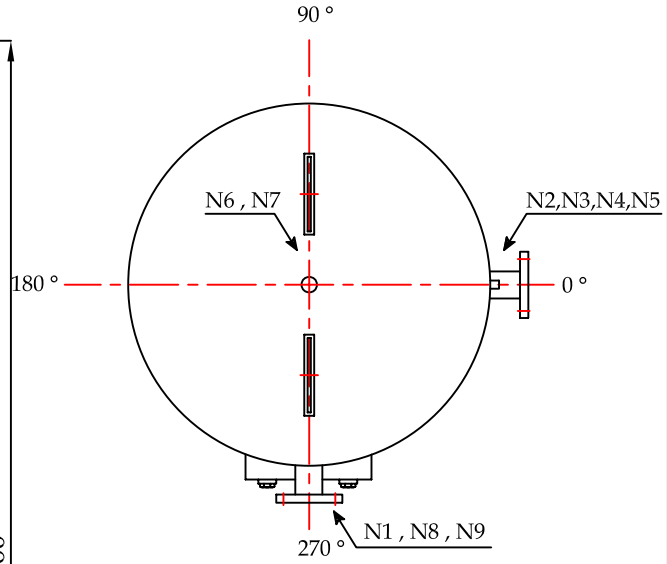

TOP VIEW

DESIGN DATA

CAPACITY AIR VOLUME		6000 LITRES
NUMBER OF UNITS		1
PRESSURE DESIGN		10 BAR.g (150PSI.g)
HYDROSTATIC TEST		15 BAR.g (225PSI.g)
APPROX. WEIGHT		1800 Kg
MATERIAL		SS400 x 12 mm.thk.
PAINT	- INTERNAL SURFACE	COAL TAR EPOXY
	- EXTERNAL PRIMER	RED OXIDE
	- EXTERNAL SURFACE	TOA G-370

LONGITUDINAL & CIRCUMFERENTIAL WELDING

INSIDE	ELECTRICAL WELDING 4 mm.
	YAWATA L - 55 (AWS.E-7016)
OUTSIDE	FULLY AUTOMATIC WELDING (SAW)
	FLUX LINCOLN # 860
	WIRE LINCOLN L-61 (AWS EM 22K)
NOZZLE AND OTHERS	SHIELD METAL ARC WELDING (SMAW)
	YAWATA L - 55 (AWS.E-7016)

NOZZIE LIST

ITEM NO.	SERVICE	SIZE	QTY	CONNECTION
N1	AIR OUTLET	Ø 5 "	1	FLANGE JIS 10 K
N2	SAFETY VALVE	Ø 1 "	1	Socket BSW
N3	PRESSURE GAUGE	Ø 1 "	1	Socket BSW
N4	AIR REGULATION NOZZLE	Ø 1 "	1	Socket BSW
N5	AIR INLET	Ø 5 "	1	FLANGE JIS 10 K
N6	DRAIN	Ø 1 "	1	Socket BSW
N7	HYDRO TEST NOZZLE	Ø 1 "	1	Socket BSW
N8	MAN HOLE	12"x14"	1	
N9	NAME PLATE			

AIR RECEIVER TANK CAPACITY 6000/12 LITERS

CUSTOMER			
DRAW BY	S.Wirat	DATE	01/04/2011
APPROVED		REV	0

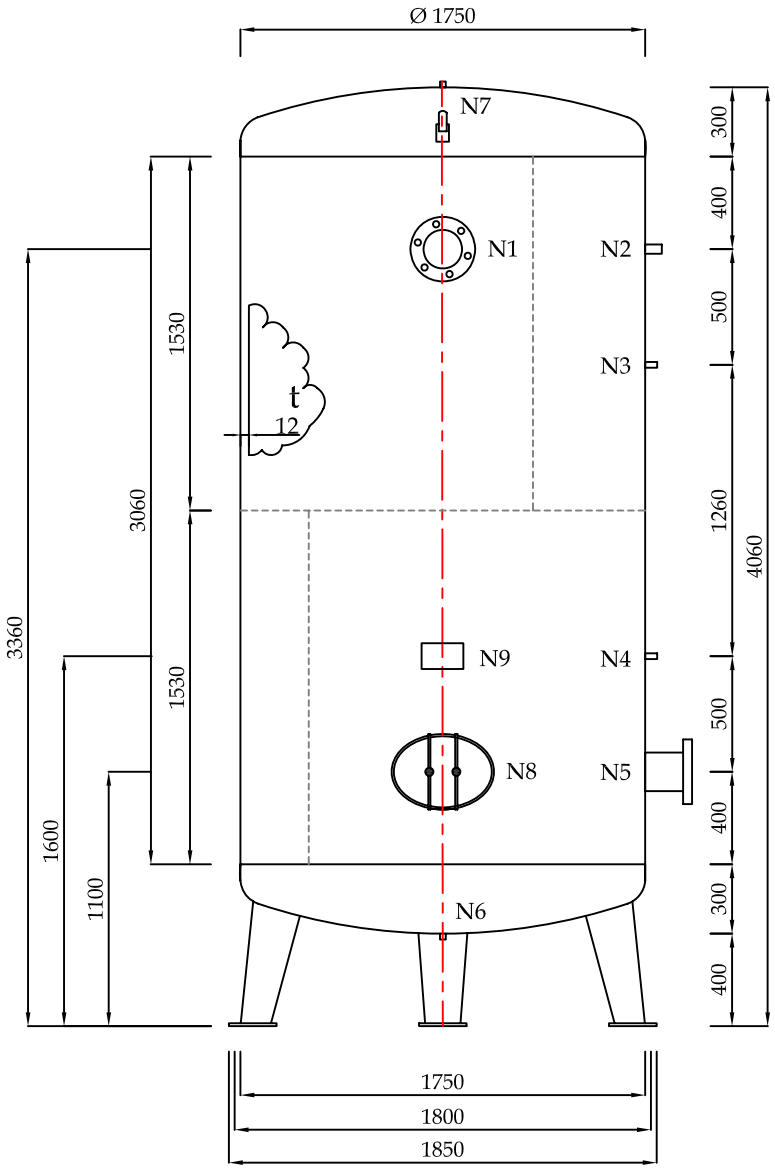

FRONT VIEW

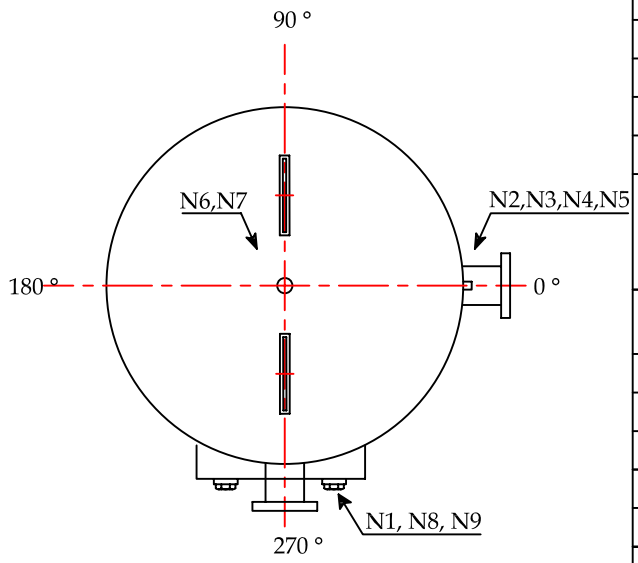

TOP VIEW

DESIGN DATA

CAPACITY AIR VOLUME		8000 LITRES
NUMBER OF UNITS		1
DESIGN PRESSURE		10 BAR.g (150PSI.g)
HYDROSTATIC TEST		15 BAR.g (225PSI.g)
APPROX. WEIGHT		2200 Kg
MATERIAL		SS400 x 12 mm.thk.
PAINT	- INTERNAL SURFACE	COAL TAR EPOXY
	- EXTERNAL PRIMER	RED OXIDE
	- EXTERNAL SURFACE	TOA G-370

LONGITUDINAL & CIRCUMFERENTIAL WELDING

INSIDE	ELECTRICAL WELDING 4 mm.
	YAWATA L - 55 (AWS.E-7016)
OUTSIDE	FULLY AUTOMATIC WELDING (SAW)
	FLUX LINCOLN # 860
	WIRE LINCOLN L-61 (AWS EM 22K)
NOZZLE AND OTHERS	SHIELD METAL ARC WELDING (SMAW)
	YAWATA L - 55 (AWS.E-7016)

NOZZIE LIST

ITEM NO.	SERVICE	SIZE	Q'TY	CONNECTION
N1	AIR OUTLET	Ø 5 "	1	FLANGE JIS 10 K
N2	SAFETY VALVE	Ø 1"	1	Socket BSW
N3	PRESSURE GAUGE	Ø 1"	1	Socket BSW
N4	AIR REGULATION NOZZLE	Ø 1 "	1	Socket BSW
N5	AIR INLET	Ø 5 "	1	FLANGE JIS 10 K
N6	DRAIN	Ø 1"	1	Socket BSW
N7	HYDRO TEST NOZZLE	Ø 1"	1	Socket BSW
N8	MAN HOLE	12"x14"	1	
N9	NAME PLATE			

AIR RECEIVER TANK CAPACITY 8000/12 LTRS

CUSTOMER			
DRAWN BY	S.Wirat	DATE	01/04/2011
APPROVED		REV	0

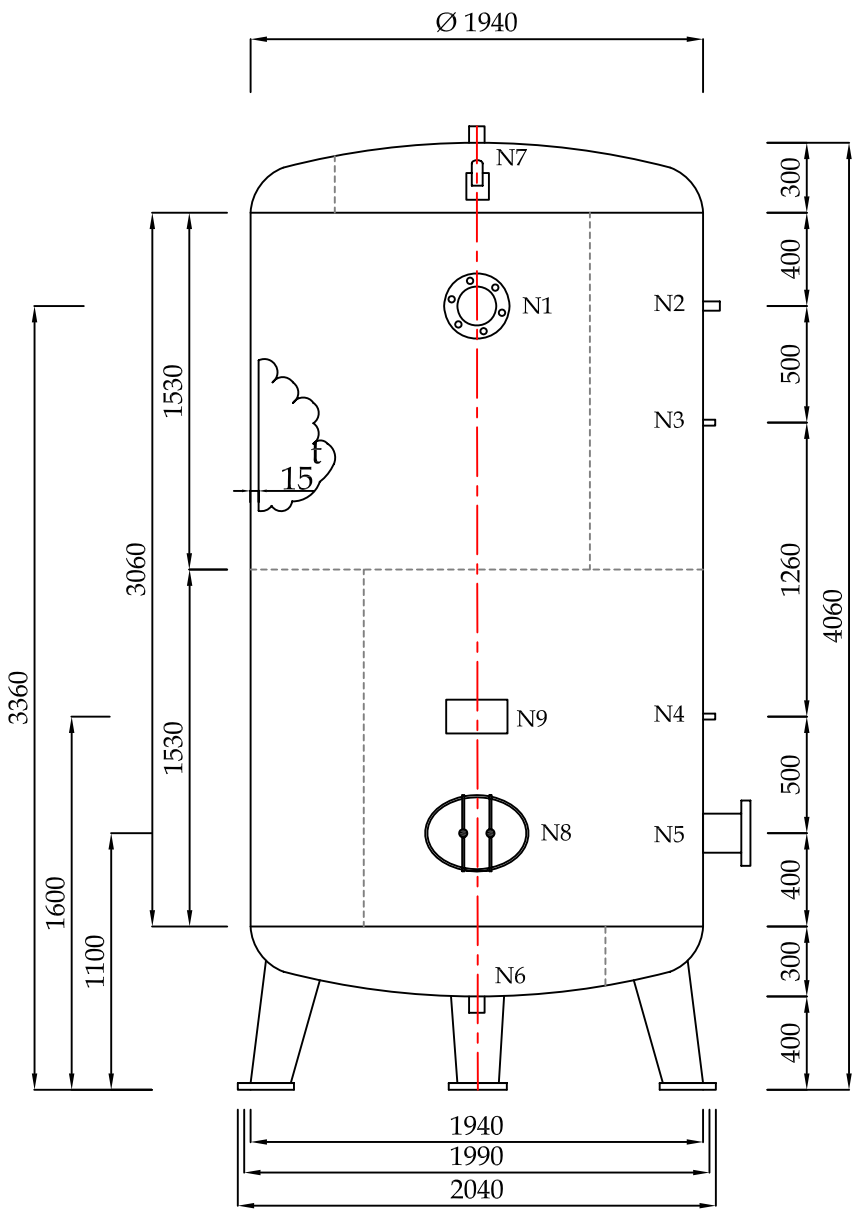

FRONT VIEW

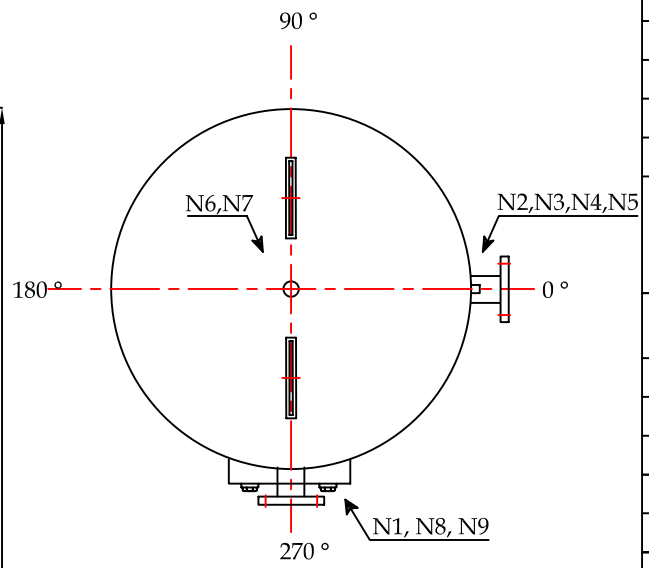

TOP VIEW

DESIGN DATA

CAPACITY AIR VOLUME		10000 LITRES
NUMBER OF UNITS		1
DESIGN PRESSURE		10 BAR.g (150PSI.g)
HYDROSTATIC TEST		15 BAR.g (225PSI.g)
APPROX. WEIGHT		3000 Kg
MATERIAL		SS400 x 15 mm.thk.
PAINT	- INTERNAL SURFACE	COAL TAR EPOXY
	- EXTERNAL PRIMER	RED OXIDE
	- EXTERNAL SURFACE	TOA G-370

LONGITUDINAL & CIRCUMFERENTIAL WELDING

INSIDE	ELECTRICAL WELDING 4 mm.
	YAWATA L - 55 (AWS.E-7016)
OUTSIDE	FULLY AUTOMATIC WELDING (SAW)
	FLUX LINCOLN # 860
	WIRE LINCOLN L-61 (AWS EM 22K)
NOZZLE AND OTHERS	SHIELD METAL ARC WELDING (SMAW)
	YAWATA L - 55 (AWS.E-7016)

NOZZIE LIST

ITEM NO.	SERVICE	SIZE	Q'TY	CONNECTION
N1	AIR OUTLET	Ø 6"	1	FLANGE JIS 10 K
N2	SAFETY VALVE	Ø 1 ½ "	1	Socket BSW
N3	PRESSURE GAUGE	Ø 1"	1	Socket BSW
N4	AIR REGULATION NOZZLE	Ø 1 "	1	Socket BSW
N5	AIR INLET	Ø 6 "	1	FLANGE JIS 10 K
N6	DRAIN	Ø 2 "	1	Socket BSW
N7	HYDRO TEST NOZZLE	Ø 2 "	1	Socket BSW
N8	MAN HOLE	12"x14"	1	
N9	NAME PLATE			

AIR RECEIVER TANK CAPACITY 10000/15 LTRS

CUSTOMER			
DRAWN BY	S.Wirat	DATE	01/04/2011
APPROVED		REV	0